UNFINISHED SHAFT ENDS

Screw shaft diameter ϕ32, Lead 5

(Unit : mm)

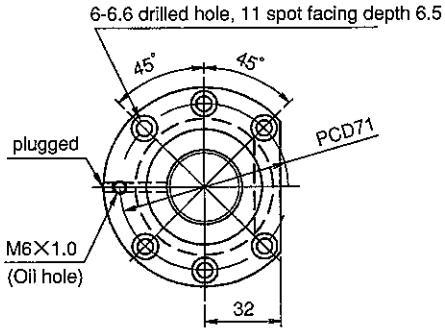

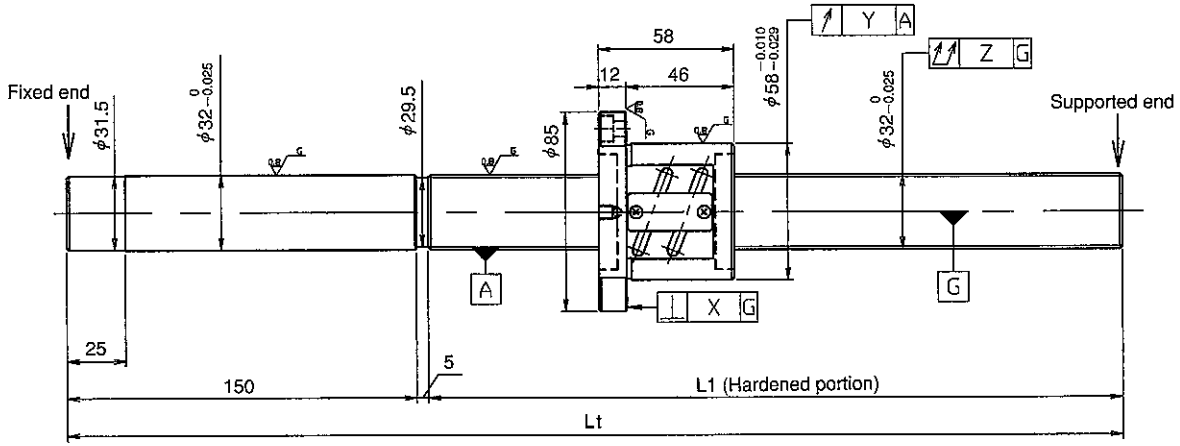

Model No.	Axial clearance	L_1	L_t	X	Y	Z	Preload torque (N·cm)	Lead accuracy ±Ec	Lead accuracy ec	Lead accuracy e300	Wiper	Mass (kg)
GE3205ES-DALR-0600A	~0.030 (M)	445	600	0.018	0.030	0.090	—	0.05	—	—	Lip seal	4.83
GE3205ES-DALR-1000A		845	1000			0.130						7.20
＊GG3205ES-DALR-0600A	~0.005 (F)	445	600	0.013	0.019	0.060	~5.0	0.027	0.020	0.018		4.83
＊GG3205ES-DALR-1000A		845	1000			0.085	~7.0	0.040	0.027			7.20

Notation of standard ground ball screw

●Standard length shaft without end machining
GE3205ES-DALR-□□□□A
GG3205ES-DALR-□□□□A

●With end machining specified on your drawing
GE3205ES-□A□R-□□□□X□□□□-C7M
GG3205ES-□A□R-□□□□X□□□□-C5□
Overall length Thread length

- JIS B 1192-1987 (GG series) applies to accuracy standard values shown in the above-mentioned table.
- Support unit : BUK-25A (BUK-25F, BUK-25S) and BUM-25 is recommended. (Refer to P.398)
- Product with axial clearance ~0.005 (F) shown in the table may be partially preloaded.
- Preload torque shown in the table is a value before greasing.
- The grease is contained inside of nut only at the time of delivery. When using it, apply lubricant.
- For asterisked ＊model with unworked shaft ends equivalent to lead accuracy grade C3, contact KURODA.

Table of optional specifications for each model

Series	Additional machining of shaft end	Axial clearance adjustment (Note 2)	Surface treatment (Note 1)	Difference of grease	Direction of nut	Wiper removal
GE	○	×	○	○	○	○
GG	○	○	○	○	○	○

(Note 1) The above-mentioned surface treatment is LD treament (coating thickness : 1 to 2 μm).

(Note 2) For axial clearance adjustment for GG series, contact KURODA.

Ball screw specifications

Screw shaft dia.	32	Axial clearance	~0.030 (M)	~0.005 (F)
Lead	5	Basic dynamic load rating	19000N	
Thread direction	Right-hand	Basic static load rating	57200N	
Number of circuits	2.5turn 2circuit	Spacer ball	—	
Ball diameter	3.175	Lubricant	Alvania Grease No.2	

Refer to page 24 for NOTATION OF MODEL NUMBER.

SHAFT END FINISH ORDERING SHEET

Screw shaft diameter ϕ32, Lead 5

(Unit : mm)

GE3205ES-DALR- ☐☐☐☐ X ☐☐☐☐ -C7M

GG3205ES-DALR- ☐☐☐☐ X ☐☐☐☐ -C5 ☐

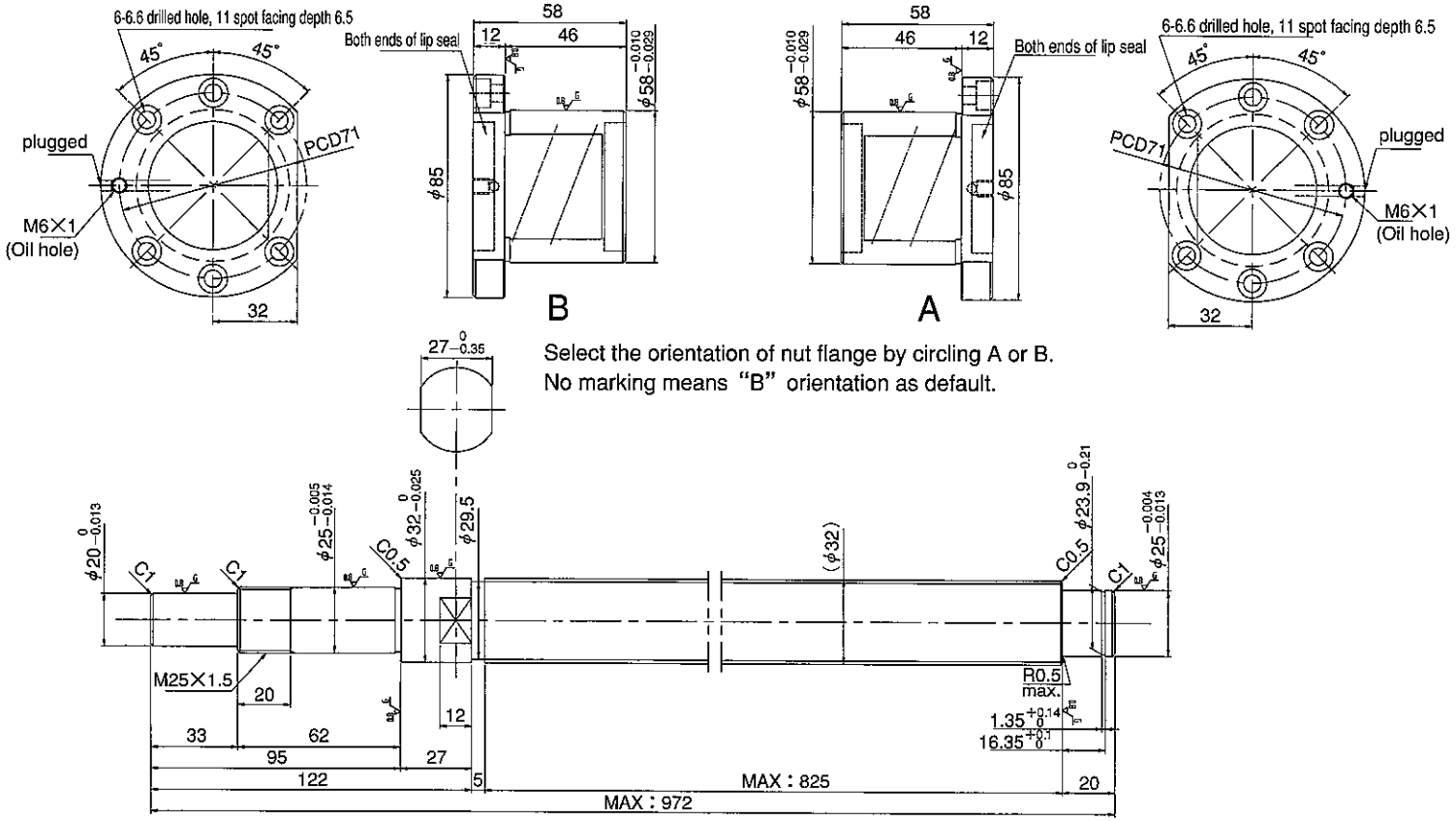

Select the orientation of nut flange by circling A or B.
No marking means "B" orientation as default.

Applicable Support Unit

Direct mount : BUK-25A (Fixed end unit+Supported end unit) Refer to Page.408

Circle flange : BUM-25 (Fixed end unit+Supported end bearing) Refer to Page.415

Company Name			
Telephone		Name of Person in Charge	
Company Address			

Refer to page 24 for NOTATION OF MODEL NUMBER.